GROOM

GRS39810X

Ref : 3700000821600

30/06/2011

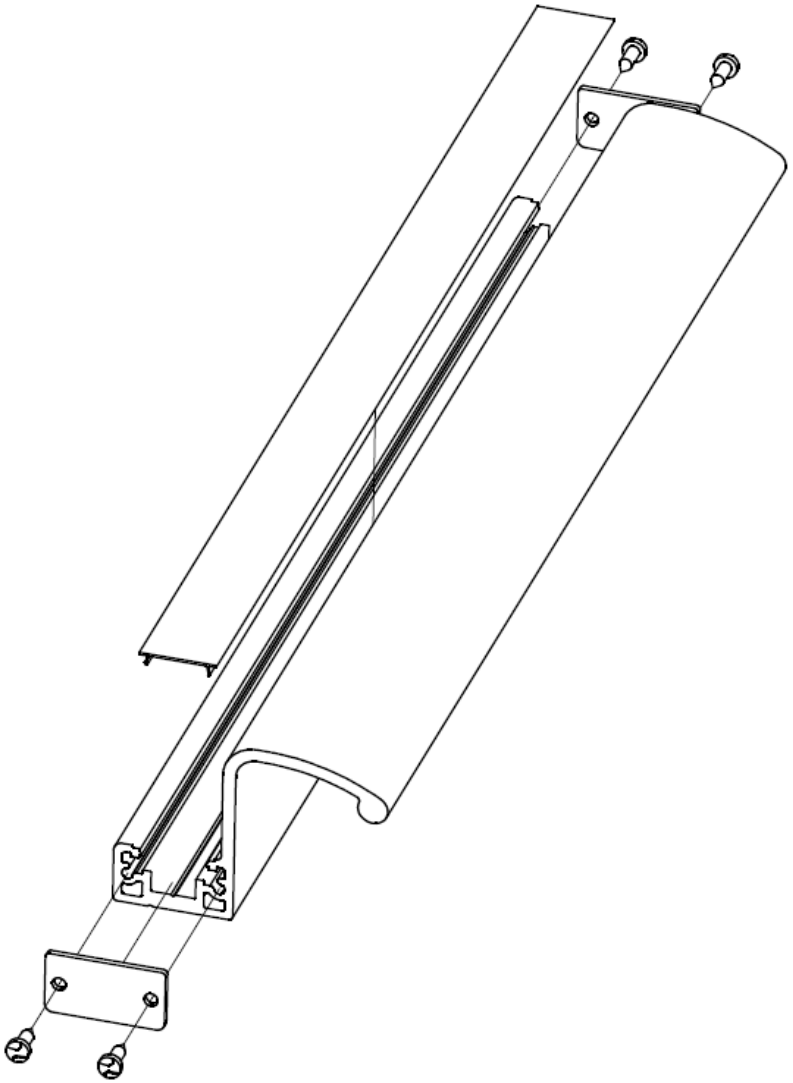

GROOM

GRS39810X

Ref : 3700000821600

30/06/2011

TRENOIS DECAMPS

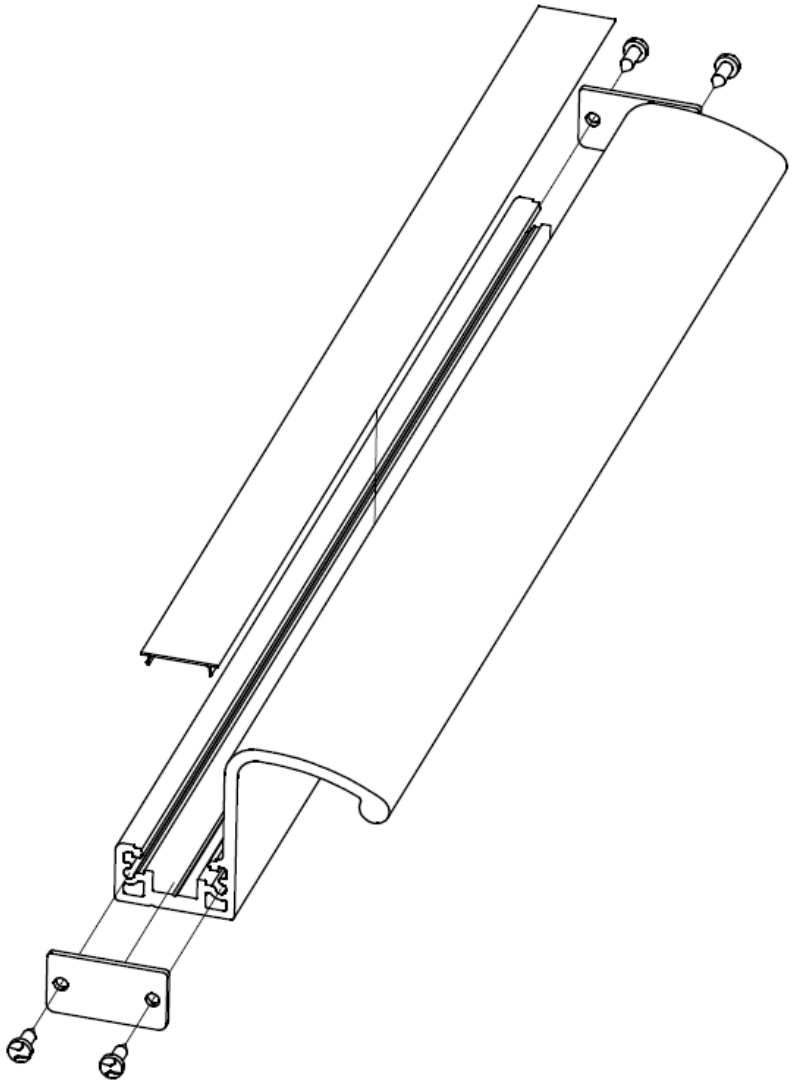

www.groom.fr ✉communication@groom.fr